EE300Ex-xT

Temperature Transmitter for Intrinsically Safe Applications

The EE300Ex-xT intrinsically safe transmitter measures reliably temperature (T) in explosion hazard areas. It complies with the classifications for Europe (ATEX), International (IECEx), USA / Canada (FM) and China (NEPSI) for flammable gas and dust applications.

The entire device can be placed in the explosion endangered area. The remote sensing probe allows for classification up to T6.

Measurement performance
EE300Ex-xT stands for highly accurate and long term stable measurement over the full range -70…200 °C (-94...392 °F), with pressure rating up to 20 bar (300 psi).

Supply and outputs
The device can be powered by any intrinsically safe supply unit or via Zener barriers. The measured data is available on a 4…20 mA, 2-wire output and on the LCD display.

Robust, functional design
EE300Ex-xT is available for wall mount and with remote probe up to 10 m (32.8 ft) The stainless steel enclosure and probe are suitable for harsh environment in challenging industrial applications. The EE300Ex-xT design facilitates the installation as well as the replacement of the measuring section (electronics and probe) without time consuming wiring for both models.

Easy Configuration and Adjustment
The setup of the analogue outputs and as well as the adjustment of the T reading can be easily performed with the optional EE-PCA Product Configuration Adapter and the free EE-PCS Product Configuration Software.

Typical Applications

process control
chemical and pharmaceutical industry
hazardous storage rooms
oil and gas industry

Features

approved for gas and dust
installation in zone 0 / 20 and Div. 1
stainless steel enclosure and probe
highest accuracy up to 200°C (392°F)
pressure rating 20bar (300psi)

Dimensions in mm (inches)

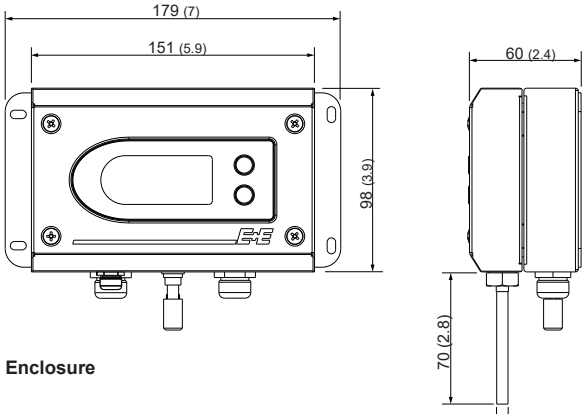

Enclosure

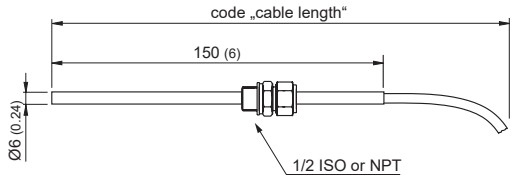

remote probe 0.1...20bar (1.5...300psi) with cut-in fitting

Technical Data

Measurand

Temperature

Temperature sensor	Pt1000 (Tolerance class A, DIN EN 60751)
Measuring range	wall mount: -40...60 °C (-40...140 °F) remote probe:-70...200 °C (-94...392 °F)
Accuracy[1)]	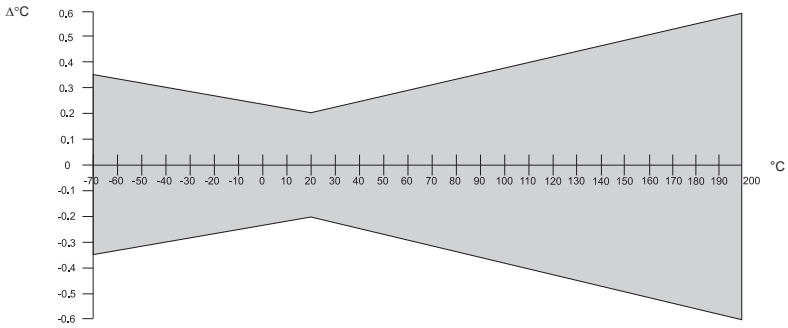
Temperature dependence of electronics	typ. 0.005 °C/°C

Outputs

Scalable analogue output	4-20 mA (2-wire) R_L=(Vcc-9 V)/20 mA

General

Supply voltage	$V_{cc\ min}$=(9+RL*0.02) VDC $V_{cc\ max}$ = 28 VDC R_L load resistor	
Current consumption	max 20 mA	
Temperature range	probe	according measuring range
	electronics	-40...60 °C (-40...140 °F)
	electronics with display	-20...60 °C (-4...140 °F)
Material	enclosure	stainless steel 1.4404
	probe cable	PTFE
	probe	stainless steel 1.4541
Protection class of housing	IP65 / Nema 4	
Cable gland	M16 for cable diameter 5 - 10 mm (0.2 - 0.4")	
	M20 for cable diameter 10 - 14 mm (0.4" - 0.6")	
Electrical connection	screw terminals max. 1.5 mm² (AWG 16)	
Electromagnetic compatibility according	EN61326-1 EN61326-2-3	ICES-003 ClassB
	Industrial Environment	FCC Part15 ClassB
Storage temperature range	electronics and probe	-20...60 °C (22...140 °F)

1) The accuracy statement includes the uncertainty of the factory calibration with an enhancement factor k=2 (2-times standard deviation). The accuracy was calculated in accordance with EA-4/02 and with regard to GUM (Guide to the Expression of Uncertainty in Measurement).

Ex - Classifications

Europe (ATEX)

Certificate:	TPS 13 ATEX 38892 003 X by TÜV SÜD Product Service GmbH
Safety factors:	Ui = 28V; Ii = 100mA; Pi = 700mW; Ci = 2.2nF; Li ≈ 0mH
Ex-Designation:	
Transmitter without display	II 1 G Ex ia IIC T4 Ga / II 1 D Ex ia IIIC T80°C Da
Transmitter with display	II 2 G Ex ia IIC T4 Gb / II 1 G Ex ia IIB T4 Ga
Remote probe	II 1 G Ex ia IIC T6-T1 Ga / II 1 D Ex ia IIIC T80°C...220°C Da

International (IECEx)

Certificate:	IECEx FMG 14.0017 X by FM Approvals
Safety factors:	6.4 Vdc ≤ Ui ≤ 28Vdc; Ii = 100mA; Pi = 700mW; Ci = 2.2nF; Li = 0mH
Ex-Designation:	
Transmitter without display	Ex ia IIC T4 Ta = -40°C to 60°C Ga / Ex ia IIIC T131°C Da
Transmitter with display	Ex ia IIC T4 Ta = -40°C to 60°C Gb / Ex ia IIB T4 Ta = -40°C to 60°C Ga
Remote probe	Ex ia IIC T6-T1 Ta = -70°C to 200°C Ga / Ex ia IIIC T80°C Da

China (NEPSI)

Certificate:	Cert NO. GYJ16.1417X by NEPSI
Safety factors:	Ui = 28Vdc; Ii = 100mA; Pi = 700mW; Ci = 2.2nF; Li = 0mH
Ex-Designation:	
Transmitter without display	Ex ia IIC T4 Ga, Ex iaD 20 T131
Transmitter with display	Ex ia IIC T4 Gb, Ex ia IIB T4 Ga
Remote probe	Ex ia IIC T1~T6 Ga, Ex iaD 20 T80

USA (FM)

Certificate:	No. FM17US0302X by FM Approvals
Safety factors:	6.4 Vdc ≤ Vmax (or Ui) ≤ 28Vdc; Imax (or Ii) = 100mA; Pi = 700mW; Ci = 2.2nF; Li = 0mH

Ex-Designation:

Equipment Group I: EE300Ex without display

Class I, II, III, Division 1, Groups A, B, C, D, E, F and G; T4 Ta = -40°C to +60°C; Entity – M1_139080; IP65
Class I, II, III, Division 2, Groups A, B, C, D, E, F and G; T4 Ta = -40°C to +60°C
Class I, Zone 0, AEx ia IIC T4 Ta = -40°C to +60°C Ga; Entity – M1_139080; IP65
Zone 20, AEx ia IIIC T131°C Ta = -40°C to +60°C Da; Entity – M1_139080; IP65

Remote Probe:

Class I, II, III, Division 1, Groups A, B, C, D, E, F and G; T6…T1; Entity – M1_139080; IP65
Class I, II, III, Division 2, Groups A, B, C, D, E, F and G; T6…T1
Class I, Zone 0, AEx ia IIC T6…T1 Ga; Entity – M1_139080; IP65
Zone 20, AEx ia IIIC T80°C Da; Entity – M1_139080; IP65

Equipment Group II: EE300Ex with display

Class I, Division 1, Groups C, and D; T4 Ta = -40°C to +60°C; Entity – M1_139080
Class I, Division 2, Groups A, B, C and D; T4 Ta = -40°C to +60°C; Entity – M1_139080
Class I, Zone 0, AEx ia IIB T4 Ta = -40°C to +60°C Ga; Entity – M1_139080
Class I, Zone 1, AEx ia IIC T4°C Ta = -40°C to +60°C Gb; Entity – M1_139080

Remote Probe:

Class I, II, III, Division 1, Groups A, B, C, D, E, F and G; T6…T1; Entity – M1_139080; IP65
Class I, II, III, Division 2, Groups A, B, C, D, E, F and G; T6…T1
Class I, Zone 0, AEx ia IIC T6…T1 Ga; Entity – M1_139080; IP65
Zone 20, AEx ia IIIC T80°C Da; Entity – M1_139080; IP65

CANADA (FM)

Certificate:	No. FM17CA0154X by FM Approvals
Safety factors:	6.4 Vdc ≤ Vmax (or Ui) ≤ 28Vdc; Imax (or Ii) = 100mA; Pi = 700mW; Ci = 2.2nF; Li = 0mH

Ex-Designation:

Equipment Group I: EE300Ex without display

Class I, II, III, Division 1, Groups A, B, C, D, E, F and G; T4 Ta = -40°C to +60°C; Entity – M1_139080; IP65
Class I, II, III, Division 2, Groups A, B, C, D, E, F and G; T4 Ta = -40°C to +60°C
Zone 0, Ex ia IIC T4 Ta = -40°C to +60°C Ga; Entity – M1_139080; IP65
Zone 20, Ex ia IIIC T131°C Ta = -40°C to +60°C Da; Entity – M1_139080; IP65

Remote Probe:

Class I, II, III, Division 1, Groups A, B, C, D, E, F and G; T6…T1; Entity – M1_139080; IP65
Class I, II, III, Division 2, Groups A, B, C, D, E, F and G; T6…T1
Zone 0, Ex ia IIC T6…T1 Ga; Entity – M1_139080; IP65
Zone 20, Ex ia IIIC T80°C Da; Entity – M1_139080; IP65

Equipment Group II: EE300Ex with display

Class I, Division 1, Groups C, and D; T4 Ta = -40°C to +60°C; Entity – M1_139080
Class I, Division 2, Groups A, B, C and D; T4 Ta = -40°C to +60°C; Entity – M1_139080
Zone 0, Ex ia IIB T4 Ta = -40°C to +60°C Ga; Entity – M1_139080
Zone 1, Ex ia IIB T4 Ta = -40°C to +60°C Gb; Entity – M1_139080

Remote Probe:

Class I, II, III, Division 1, Groups A, B, C, D, E, F and G; T6…T1; Entity – M1_139080; IP65
Class I, II, III, Division 2, Groups A, B, C, D, E, F and G; T6…T1
Zone 0, Ex ia IIC T6…T1 Ga; Entity – M1_139080; IP65
Zone 20, Ex ia IIIC T80°C Da; Entity – M1_139080; IP65

The USA and Canada approvals are valid for air and gas measurement only.

Ordering Guide

			EE300Ex-xT6S	EE300Ex-xT6S
Hardware Configuration	**Model**	wall mount	A	
		remote probe		H
	Display	without display	x	
		with display [1]	D	
	Electrical Connection	2 x M16 cable gland	B	
		1/2″ NPT conduit adapter	C	
		2 x M20 cable gland	G	
	Probe Cable	wall mount	x	
		1 m (3.3 ft)		C
		2 m (6.6 ft)		E
		5 m (16.4 ft)		G
		10 m (32.8 ft)		H
	Probe Length	wall mount	x	
		150 mm (5.9″)		E
	Feedthrough (probe fitting)	without probe fitting	x	x
		1/2“ ISO - cut-in fitting; 6mm (0.24″)		I
		1/2“ NPT - cut-in fitting; 6mm (0.24″)		J
	Ex-Certification	ATEX (Europe)	AT	
		IECEx (International)	IC	
		NEPSI (China)	CN	
		FM (Canada)	CA	
		FM (USA)	FM	
Setup	**Units**	metric [°C]	M	
		non-metric [°F]	N	
	Output	temperature	Tx	
	Scaling Output	range	yyy select according data sheet „Scaling Outputs“	

[1] No display possible for environments with combustible dust, fibers and flyings and in gases with EPL Ga IIC (Groups A, B)

Order Examples

EE300Ex-xT6SHDBHEIAT/MTx005

Model:	remote probe
Display:	with display
Electrical Connection:	2 x M16 cable gland
Probe Cable:	10 m (32.8 ft)
Probe Length:	150 mm (5.9″)
Feedthrough:	1/2“ ISO - cut-in fitting
Ex-Certification:	ATEX (Europe)
Units:	metric
Output:	temperature
Scaling Output:	0...100 °C

EE300EX-xT6SAxBxxxFM/NTx083

Model:	wall mount
Display:	without display
Electrical Connection:	2 x M16 cable gland
Probe Cable:	wall mount
Probe Length:	wall mount
Feedthrough:	without probe fitting
Ex-Certification:	FM (USA)
Units:	non metric
Output:	temperature
Scaling Output:	-40...140 °F

Accessories

Blank cover for housing base	HA011401
Safety barrier, 1-channel, STAHL 9002/13-280-093-001	HA011410
Intrinsically safe supply unit, 1-channel, STAHL 9160/13-11-11	HA011405
Intrinsically safe supply unit , 2-channel, STAHL 9160/23-11-11	HA011406
Sealing plug for unused M16 cable glands	HA011402
Sealing plug for unused M20 cable glands	HA011404
Product Configuration Software	EE-PCS (free download: www.epluse.com/configurator)
Adapter Kit for configuration and adjustment (must be ordered together, see datasheet EE-PCA):	
Pos. 1: Product Configuration Adapter	EE-PCA
Pos. 2 : Connection cable	HA011068